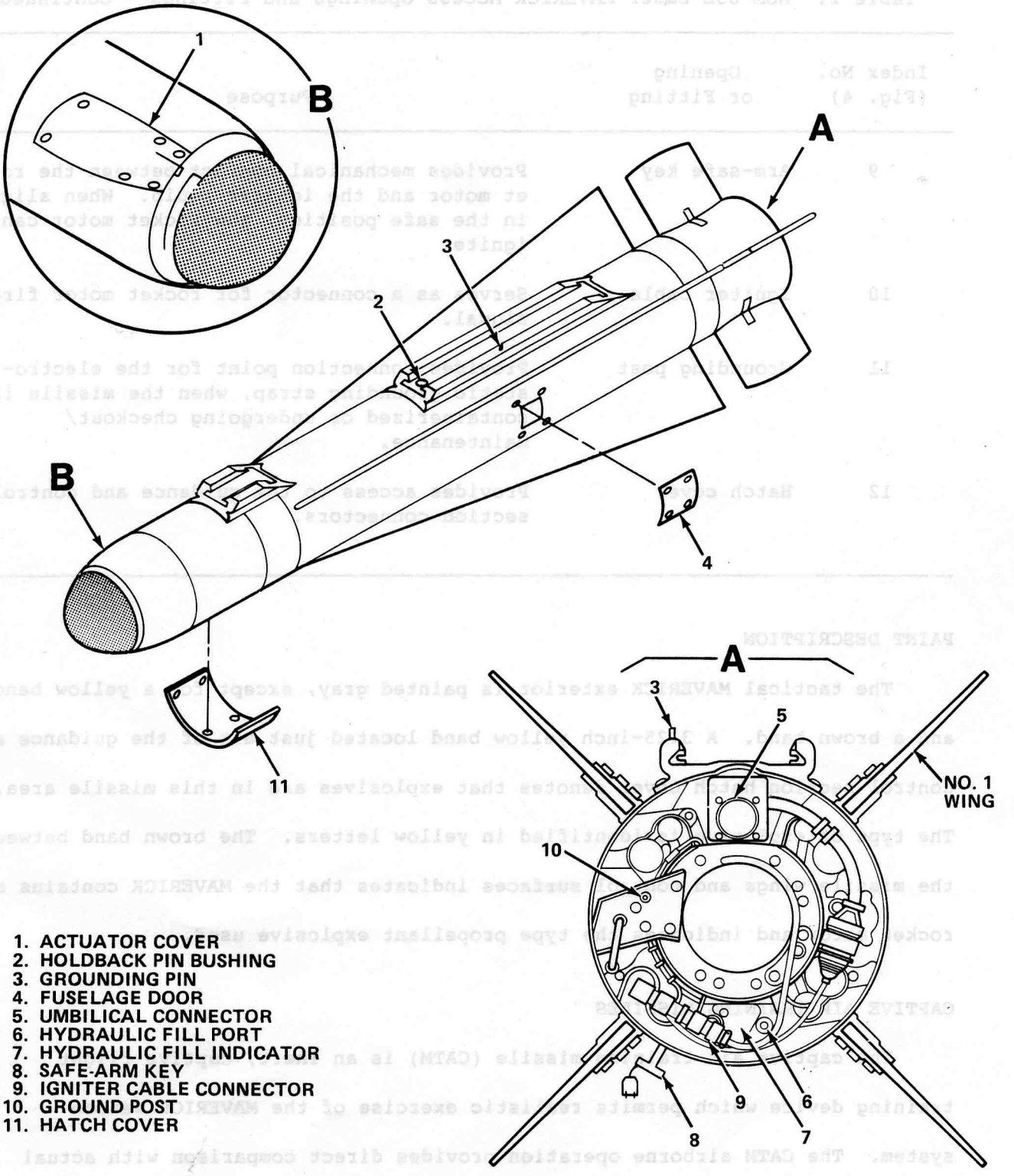

1. ACTUATOR COVER
2. HOLDBACK PIN BUSHING
3. GROUNDING PIN
4. FUSELAGE DOOR
5. UMBILICAL CONNECTOR
6. HYDRAULIC FILL PORT
7. HYDRAULIC FILL INDICATOR
8. SAFE-ARM KEY
9. IGNITER CABLE CONNECTOR
10. GROUND POST
11. HATCH COVER

Figure 4. AGM-65E Laser MAVERICK Access Openings and Fittings.